Baltic Biorefinery Symposium
26–28 May, 2005
Aalborg University Esbjerg

Proceedings

Edited by:
Aalborg University Esbjerg
(ACABS)

Application of high-voltage plasma and cavitation technologies for production of liquid humic products

Semjons Cifanskis* **and Raitis Ziemelis**

Scientific and Production Firm "Latinvent",
61/60 Dzelzavas Street, Rīga, LV-1084, Latvia
Phone: +371 7089469; email: semjons.cifanskis@rtu.lv

1. Introduction

Two types of high technologies intended for production of liquid humic products are developed.

The first one is the high-voltage plasma technology based on utilization of different interconnected nonlinear dynamic effects and physical phenomena. Plasma filament with high temperature, powerful shock waves, pulse electromagnetic and X-radiations, ultrasound, turbulization of flows occur in a fluid under high-voltage discharge [1]. These factors give rise to productive extraction with particularly pronounced sterilization effect. Three types of high-voltage plasma installations have been designed and tested at the Firm "Latinvent": the device for activation of chemical reactions, the installation for processing of organic raw materials and the installation for cleaning of pipes from internal deposits [2].

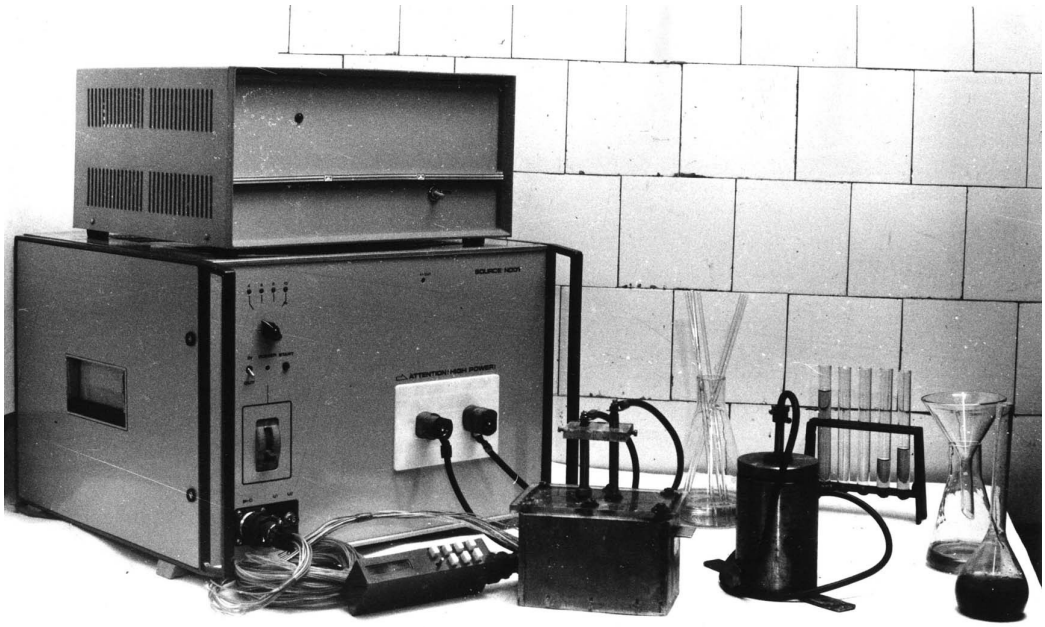

Fig. 1. Electro-sparking chemical reactor

Such physical factors as intensive shock waves, plasma, cavitation and X-radiation simultaneously act on chemical reagents in the electro-sparking reactor designed (Fig. 1). Thanks to this the reactor can be successfully used in different applications including high-effective extraction and coagulation of components from organic materials, sterilization of potable water, acceleration of chemical reactions and synthesis of new compounds.

Fig. 2. Installation for processing of organic raw materials

Installation intended for processing of peat, medicinal herbs, seaweeds, fruits, vegetables, dairy produce, sawdust, pine needles and other organic materials is shown in Fig. 2. Installations of middle and high capacity can be obtained by increasing of the numbers of mini-modulus used. Rapid dismounting of the mini-plant and its carriage by road is possible. Mounting the mini-plant and its start-up in the new location place may be carried out in 4-6 hours.

High-voltage plasma installation “Mole” intended for cleaning of pipes from internal deposits is shown in Fig. 3.

Fig. 3. Installation for cleaning of pipes from internal deposits

The second proposed technology is based on cavitation extraction, which belongs to high-tech procedures. Cavitation is a specific method for energy concentration in collapsed bubbles. This method is one of the strong multifactor tools for chemical and physical manipulation with solid particles dispersed in liquid media. Cavitation is accompanied with appearance of water hammer (up to 100 MPa), shock waves, intensive vortex formation and ultrasound radiation. This technology gives an opportunity to obtain the following products: liquid humic fertilizers; mixed feed with natural organic fillers; extracts from medicine grasses, etc.

Examples of practical application of these technologies for manufacturing of liquid humic products are considered in this paper.

2. High-voltage plasma installation for production of artificial manure

At present there is a great demand for organic fertilizers due to the intensive development of non-polluting agriculture. One of the most effective fertilizers is horse manure. For its production the following means and conditions are necessary: a pasture in the summer and hay in the winter, a paddock and automation facilities for submission of feeds and water, means of cleaning of manure and bunkers for its storage during 4 - 6 months, veterinary and other maintenance. Demerits of the natural way of horse manure production lie in its low productivity (the horse makes about 3 - 4 kg of manure in a day), as well in insufficient sterility and unpleasant smell of final product.

Inventor L.A.Yutkin proposed to use a high-voltage plasma method for production of artificial manure [3]. These activities have been continued in Scientific and Production Firm "Latinvent".

The installation (Fig. 4) consists of the belt conveyer 1 carrying a peat mix 2, the metering hopper 3, the first high-voltage plasma bioreactor 4, the transfer pump 5, the second bioreactor 6, system of pipelines with cocks. The electric part contains the programming block 7, the surge current generator 8 of high voltage, the first (9) and the second (10) groups of electrodes, connecting power cables 11.

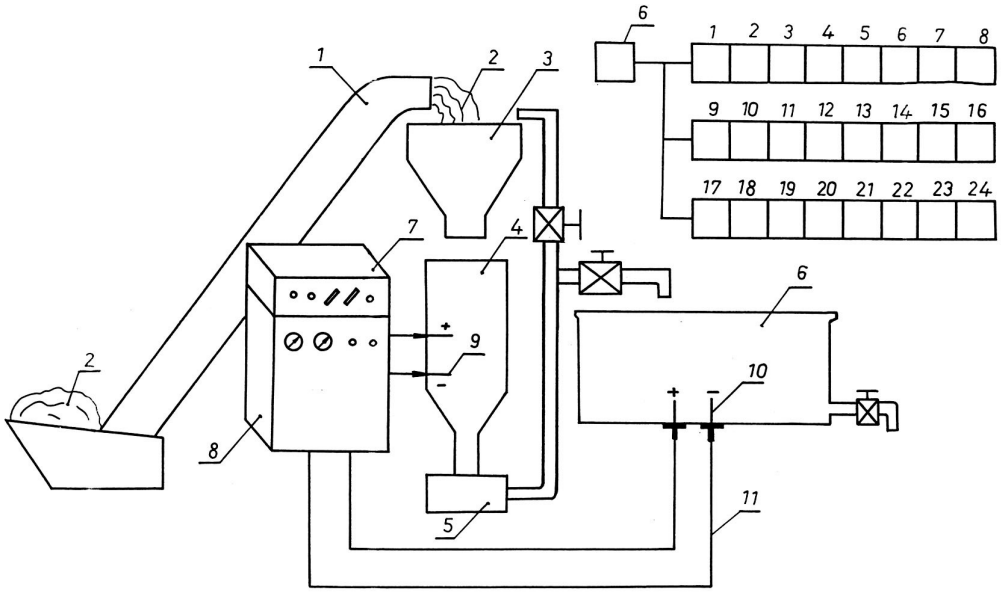

Fig. 4. Block diagram of the installation for production of artificial manure

The peat mix 2 with the aid of the belt conveyer 1 is transported to the metering hopper 3 and then it comes into the first bioreactor 4. The transfer pump 5 fills a bioreactor 4 with water. Operating mode of the generator 8 is set up with the aid of programming device 7, and then output voltage of generator is applied to the first group of electrodes 9.

After processing during a certain time the peat pulp is pumped over in the second bioreactor 6. In this reactor secondary processing of pulp in other regimes of high-voltage discharge is performed. Thanks to this the ammonia nitrogen content of mix is increased in 1,4 - 4,5 times. Then, after 10 - 15 days of storage, the content of NH_4 in the bioreactor 6 grows in 10 - 15 times (at the expense of bacteriological explosion).

The bioreactor 6 consists of 24 sections (in Fig. 4 sections are numbered). In each section the daily dose of product enters. Therefore bioreactor 6 is fully filled for 24 days. Then daily taking out of a ready product from sections 1, 2, 3, etc begins. Ready fertilizer is directly transported to a vehicle of the consumer or to a packing line. Standard means of loading, unloading and packing are used.

Advantages of the proposed technology and produced artificial fertilizer are as follows [4]:

- Ecologically harmless technology (the infinitesimal content of nitrates);
- High sterility (harmful microbes are destroyed by high-voltage discharge);
- More high output of product from the area of one horse stall (3 x 2 м), than at a natural way of its production (approximately in 400 times);
- Full absence of a smell.

The processed peat can be used for coating of seeds, manufacturing of heat insulation plates, micro hotbeds and nutritious briquettes as well for production of liquid top-dressing, chimney fuel and in other purposes.

3. Results of agricultural experiments

Yield capacity of different plants cultivated in a mix of ground (50%) and usual peat (50%) was compared with their productivity in a mix «ground - processed peat ».

Results of hotbed experiments were the following. In the case of the processed peat using the green weight of oats has increased by 140%, and height of plants has become 1.7-2.1 times bigger. The bean crop has come to 140%, the mass of potato tubers has increased by 110% and the green weight of barley has increased by 365%. Such rapid growth of plants may be explained by the arising of vegetative hormones in the peat mix after its processing (together with increasing content of nitrogen and other microelements). These hormones essentially stimulate the growth of plants and facilitate the increase of nutritives and vitamins content in products. For example, the content of starch in potato tubers increases by 20%, but vitamin C - by 45 - 60%. Besides, the use of the processed peat has made it possible to improve appreciably the phytosanitary conditions in a hothouse ground and to deodorize a hothouse atmosphere (thanks to bactericidal properties of the high-voltage plasma discharge). The most effect from the application of the processed peat can be achieved in the case of hotbed cultivation of expensive production (e.g., flowers, vegetables, mushrooms, etc.).

It is experimentally proved, that processed peat is a dispersed nutritious medium with good gluing ability. Therefore such peat pulp can be used as good compound for seeds coating. The porous shell of such coat facilitates the ingress of moisture into the seed. As the result of coating it is possible to unify the sizes of seeds of different crops and thanks to this to sow seeds into the ground with the same standard instruments, to lower normal value of sowing and to abolish a very laborious operation of shoots thinning. In accordance with the experiments, coating has given the rise of carrot crop by 26%, but beetroot and mangel-wurzel crops - by 14% and 29% correspondingly.

Besides, according to experimental data, 1 kg of the processed peat gives twice as large gain of yield capacity than 1 kg of horse manure.

4. Application of high-voltage plasma technology in other fields

4.1. Pharmaceutical manufacture

Making of fine suspensions (up to colloid condition) of synthetic and natural resin used for preparation of medicines is possible. Solutions of low-soluble and almost insoluble substances with the concentration, which considerably exceeds a natural limit of solubility, can be received, too.

Significant acceleration of extraction of some substances from vegetative and animal raw material is achieved: sea-buckthorn oil, pine-needles, marrow, grape pips. For example, the amount of citisin extracted under high-voltage plasma processing from vegetative raw material during 1 minute is the same as extracted from it during 51 minutes in the case of fast mixing.

Glaucin has been extracted during 2 minutes, but santonin - during 5 minutes. The quantitative output of active substances from calendula flowers, leaves of bushes, valerian herb or seaweed can reach about 88 - 95% (this value is sufficiently higher than can provide familiar methods of extraction).

Reduction of extraction time of fragrant substances (ambergris, coriander, iris) is observed: for animal raw material - from 30 days up to 40 - 60 minutes; for vegetative raw material - from 14 hours up to 1.5 - 2 hours. Extracts with qualitative smell and full-blooded composition have been produced.

It was possible to combine grating operations of dried cherry fruits and hawthorn with their extraction. A sterilized nutritious crop intended for rapid cultivation of various kinds of bacteria is extracted from peat.

Application of high-voltage plasma technology has made it possible to reduce the mature time of perfumes, colognes and other perfumery liquids (in a course of experiments the mature time is reduced from 20 days up to 3 hours).

4.2. Stock-breeding

4.2.1. Production of a forage and fodder additives to animals and birds from plants with the strong casing

Nowadays there is a heightened interest to application of a straw as rough power forage in agriculture of many countries. Due to high rigidity and big content of cellulose, and also owing to the low content of nutritive, animals cannot eat a straw in great amounts. The daily diets containing big amounts of straw do not provide high producing of livestock, because the digestibility of straw of winter rye makes only 40 - 42%. More than half of used straw fodder is not digested by animals. For this reason the nutritiousness of straw is estimated as low and usually it lies within the limits from 0.2 up to 0.3 fodder units.

High-voltage plasma processing destroys the strong lignin-cellulose capsule of a plant and gives off nutritive from it. For example, after plant's processing the content of crude fat increases by 10 - 20%, mass content of soluble and reducing sugars - by 73%, but level of a crude protein - by 5 - 6%. Digestibility of forage reaches 70 - 80%. Seaweeds, rough herbs (reed), prickles, branches, pine-needles, leaves and other organic waste products may be used instead of straw, too.

The forage prepared in such a way is completely disinfected, becomes non-polluting and can be stored during a long time without losing the nutritious properties. The processed pine-needles are the perfect vitamin additive.

4.2.2. Manufacture of protein from nutrient yeast

Fermentative yeasty cells are not well digested in a stomach of animals and birds. In some cases they can cause pathogenic processes in guts. High-voltage plasma processing of yeast is a worth-while method for production of the endocellular yeasty protein causing fast growth of animals.

4.2.3. Production of fodder additives from sludge of sewage works

Natural silt is inexhaustible source of forages containing useful albuminous, mineral and vitamin additives. Processed sludge is a worth-while fodder additive. Processing of sludge includes its clearing of mechanical impurity and further high-voltage plasma treatment in special regimes providing sterility and nutritiousness of the received forage.

4.2.4. Processing of fish garbage

During fish processing a plenty (up to 20 - 30%) of quickly rotting waste products turns out. High-voltage plasma processing makes it possible to transform these wastes into a homogeneous sterile pulp which is a good food for coypu.

4.2.5. Production of watering water with increased content of nitrogen
High-voltage plasma processing causes the increase of nitrogen content in water and provides its sterilization. The processed water can be used both for plants watering and for animals feeding.

4.2.6. Increase of fertilizing properties of soil in field conditions
As is known, silty soils are the most fertile ones. These soils show high degree of dispersion (total surface area of particles in 1 kg of soil is about 23000 cm^2). High-voltage plasma processing of soil (for example, in places of trees planting) can sufficiently increase its dispersitivity, and thanks to this the processed soil becomes much better than silt.

4.3. The food industry
Now such aromatic substances as fragrant pepper, bay-leaf, cardamom and others are added in foodstuff as a powder. Powdery spices are strongly polluted with micro flora. Sterilization of spices is complicated, because volatile essential oils evaporate during this process. Therefore in production of sausage products special extracts, free of micro flora, are used. These extracts are much cheaper than powdery spices, and 1 kg of an extract replaces 30 kg of natural fragrant pepper. Besides, emulsion is more uniformly distributed in mass of a product.

High-voltage plasma processing makes it possible to increase the efficiency of some other technologies used in food industry:

- Production of true fatty emulsions for inclusion in a force-meat (in order to fix moisture better).
- Homogenization of ground canned food from strawberries, black currants, tomatoes and apples, carrots. Products have more high quality indexes. The best preservation of the aroma inherent in fresh berries is shown.
- Extraction of bitter stuff from hop. High-voltage plasma treatment of raw material expedites the extraction process in 2.5 - 3 times (in comparison with thermal processing). Besides, application of the proposed technology makes it possible to save up to 20% of raw material.
- Making of emulsions for sugar biscuits (usually about 10 - 15% of sugar remains in an insoluble condition).
- Homogenization of chocolate paste.
- Dispersion of quicklime in beet sugar manufacture.

5. Cavitation technology for production of humic substances
Investigations directed on the design of different types of cavitation devices are carried out in the Scientific and Production Firm "Latinvent" since 1991.

At first cavitation station for fuel's emulsification has been developed. Integration of these stations into the heat generation process (boiler houses in Madona and Rezekne cities, Latvia) has made it possible to reduce considerably the fuel consumption and effluents of harmful gases [5]. The principle of action of station consists in realization of a toroidal vortex inside which intensive cavitation occurs. However, processing of organic plant substances at this station was inefficient.

Therefore at the second stage of research the acoustic station has been developed. The operation principle of this station is based on excitation of plate vibrations in a fluid flow under the action of the Carman vortex trail. At this station it was possible to mix well various low-viscous organic substances (water-petrol emulsions, diesel fuel - water emulsions, emulsions for greasing of concrete forms). Main demerits of this device lie in fast clogging of narrow nozzle holes and frequent break-downs of a vibrating plate.

On the next stage of improvement of cavitation devices a rotor station was designed. At the certain speed of disk rotation the boundary fluid layer becomes turbulent, i.e. consisting of set of vortexes. Inside each vortex cavitation arises. Well dispersed “water – peat” emulsions have been produced on rotor station. Under the flowing out of such emulsion and its further drying, very thin and strong sheet is formed. However, rotor station effectively operates only at high speed of rotation or in the case of sufficiently large rotor diameter. Besides, careful dynamic balancing of a rotor, and also maintenance of compulsory liquid cooling are necessary.

The cavitation station of shock action is structurally simpler. Cavitation arises in the limited area under the impact of a resonant jet with a special barrier. Productivity of station depends on a jet's speed, distance between nozzle and a barrier, shape of a barrier and nozzle, temperatures of a liquid, relationship between water and crushing fibrous organic material. Lack of this station lies in difficulty of selection of the pump which would pump over mixes with the high content of organic substances under the high pressure on an output.

Each of developed and tested cavitation stations had its specific field of practical application. By the use of these stations carrots, needles, sawdust, peat and other substances were subjected to cavitation processing [6].

Since 1993 cavitation technologies were developed together with SIA "Stalkers". But in 2002 investigations have been transferred on SIA “Intellectual Resources” (Ventspils) and have concentrated on processing of peat. The special pumps providing circulation of a peat pulp (peat - water volume relationship is as 4:6) have been developed. Besides, original hydrodynamic flowing cavitation device and auxiliaries have been designed. Thanks to this experimental emulsification station for production of humic substances (Fig. 5) was produced. Main technical data of the station are as follows:

- power consumption 5 kW;
- weight 90 kg;
- occupied area 3 m^2;
- total productivity 200 l/h.

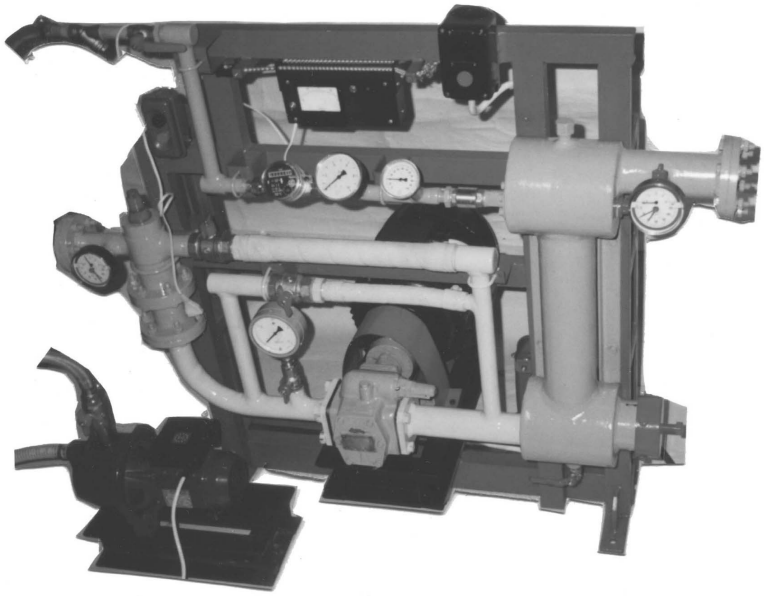

Fig. 5. Experimental emulsification station for production of humic substances

Biological testing of produced humic liquid has been performed during 2003 - 2004 by Dr. agr. L. Borovko (Institute of Crop-growing, Skriveri, Latvia). Influence of humic substances on yield capacity of spring raps has been studied.

The results of research show, that processing of raps seeds with a 0.01 % humic solution facilitates its field germinating power on 10 - 26%. The increase of raps crop was about 340-740 kg/ha (depending on year of experiment). It is characterized with essential difference coefficient $\gamma_{0,05}$ = 110 – 360 kg/ha (in comparison with the control made without application of humic substances).

Application of humic substances has positively affected on quality of a crop. For example, the crude fat content of summer raps' seeds is increased on 0.53 – 2.14% that assures a gain in output of crude fat on 172 - 340 kg/ha.

Economic calculations were made in assumption, that the price of raps seeds is 0.24 EUR/kg (the price of biological product was accepted higher on 30% than the average purchase price 0.185 EUR/kg). In this case application of humic substances for processing of raps seeds is economically justified (the net profit is about 68.20 – 150.67 EUR/ha).

In author's opinion, application of the proposed high-voltage plasma and cavitation technologies can give good results in production of bioethanol, grass juice, etc. Persons and firms are invited to cooperation both in sale of finished products and in organizing of joint production.

Acknowledgment
The authors would like to express their gratitude to engineer Vladimir Jakushevich for the participation in experiments and to Dr.Sc.Ing. Vitaly Beresnevich for the help in editing and translation of the article.

References

1. Tsyfansky, S. and Beresnevich, V. Nonlinear phenomena resulting from high-voltage discharge in fluid and their utilization in vibration engineering // *Proceedings of the IUTAM / IFToMM Symposium on Synthesis of Nonlinear Dynamical Systems (Riga, Latvia, 1998). Editors: E. Lavendelis and M. Zakrzhevsky.* - Kluwer Academic Publishers, Dordrecht / Boston / London, 2000, p. 257 - 266.
2. Tsyfansky S. L. and Beresnevich V. I. Technological processes and machines based on utilization of electrohydraulic effect // *Technika Mashinostrojenija*, 1996, № 2, p. 94 - 97. (In Russian).
3. Goltsova L. *Electrohydraulic Effect - New Possibilities in Agriculture*. - Moscow: Agropromizdat, 1987. - 140 p. (In Russian).
4. Cifanskis S. L. Application of electrohydraulic effect and cavitation technologies for production of liquid humic products // *2nd International Scientific and Practical Conference "Earthworms and Soil's Fertility" (17 - 19 March 2004, Vladimir, Russia). Abstracts.* - Vladimir, 2004, p. 279 - 281.
5. Cifanskis S.L. *Application of water-fuel oil emulsions is a way to saving of fuel and environment protection*. - Riga, 1999. - 105 p. (In Russian).
6. Cifanskis S.L. Cavitation technologies in agriculture / *Adoption of Nonlinear Effects in Industry. The Information and Advertising Book.* - Riga, 2000, p. 117 - 123. (In Russian).